www.tigerlifting.com
Our innovation, your safety.

Tiger Ultimate Lever Hoist
Model No. UL26

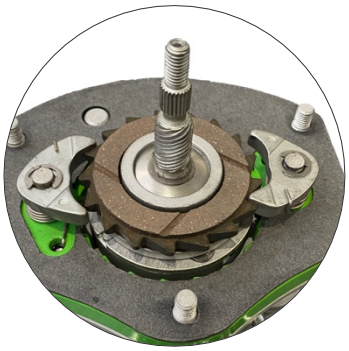

SASS – Patent pending Self-Acting Safety System

Patented Quad Cam Pawl System



Main Features

- Patent Pending Technology SASS Self Acting Safety System
  - "Our innovation your safety"
  - Continuing with our core mission statement Tiger's R&D Engineers have now developed and launched our latest UL26 Lever hoist.
  - UL26 comes with our latest Patent Pending SASS Technology that offers the ULTIMATE protection in lever hoist design.
  - Going further than any other hoist, this innovative design delivers complete user confidence by providing total safety and security, even in the most arduous operating conditions and beyond traditional environments.
  - SASS technology now protects not only the traditional brake design but, more importantly, provides critical protection against any failure on the gearbox side of the hoist.
  - Bringing together the empirically proven benefits of the patented Quad Cam pawl and ratchet design, which has established a trusted track record over 15 years of continuous use in both subsea and utility overhead line sectors.
  - SASS technology operates independently from the normal "Weston style" Ratchet and Pawl Brakes and has been proven to absorb a falling load when the standard brake has been completely removed from the hoist.
  - Ultimate Safety
  - SASS operates independently of the pinion shaft and gears, and automatically deploys in an emergency to arrest the load within 300mm.
- Corrosion and environmental protection
  UL26 is fully certified for Multi-Immersion use when used in a Subsea environment and offers the highest possible environmental protection when continuously used in the harshest Overhead Line working conditions. Precisely engineered side plates and components protected by a full gasket give the UL26 brake chamber and contents maximum protection from external contamination.
- Capacity 800kg – 20.0t
- DNV GL Verification tested according to NORSOK R-002
- Equipped with our unique intelligent dual brake system:
  - Globally patent protected Quad Cam pawl and ratchet design
  - Unique load sensing torsion brake
- Thousands of hours of empirical evidence as proof of design
- DU® self-lubricating metal polymer bearings
- Phosphor bronze bearings
- One-piece construction pinion gear

- Meets and exceeds IMCA DO28 Rev 2 guidance notes for offshore lever hoists
- Light load protection at 2% of the rated capacity
- Adaptable to use both inverted and horizontally
- Full face gasket provides brake chamber protection from outside contamination
- Fully Corrosion protected body and components to ensure reliable long-term use
- Over 1500 hours protection to ASTM B117 conditions
- Adjustable chain end anchorage specifically designed to the contours of the hoist
- Available with slipping clutch overload protection
- Fleeting angles up to 60˚ from the vertical without deration

The UL26 has been designed and developed over a number of years for use primarily in subsea, offshore or corrosive environments. The unique design features listed below give it significant safety advantages over other lever hoists. This makes the UL26 subsea lever hoist the ideal tool for all marine and extreme applications.

Developed initially with the goal of giving key stakeholders within the Oil and Gas Industry a hoist that could be certified for safe use subsea whilst meeting all the requirements of IMCA DO28 Rev. 2 “Guidance notes for offshore lever hoists”, the UL26 meets and exceeds these requirements, as well as other industry client specifications whilst conforming to standards such as BS EN 13157: 2004+A1:2009, ANSI/ASME B30.21-2005, AS1418.2* and SANS 1636. Tiger Hoists fitted with overload limiters comply fully with NORSOK R-002.
* When fitted with load bearing swivel hooks, Tiger hoists comply fully with AS 1418.2

The UL26 includes our unique rotational inertia driven torsion switch brake and freewheeling system. This brake system was designed by our research and design team to counter known failure modes in commonly used and copied longitudinal “push-pull” mechanisms or traditional style “Weston” type brake systems used on alternative lever hoists which allow easy ingress of foreign particles into the mechanism that could affect hoist operation. This Tiger brake system is now a proven design with many thousands of hours of empirical evidence as proof of design and efficiency. This design removes the need for inefficient old-style longitudinal disengagement methods of pulling the brake system apart to facilitate freewheeling. This highly efficient method of operating is not only safer but easier for the operator whilst measurably increasing the brake take up efficiency rate.

With over 50 years of professional manufacturing experience, Tiger’s commitment to innovation and customer satisfaction mean we will continue to develop and improve our products by communicating and working with our customers. The UL26 range of lever hoists incorporates our latest developments and enhancements.

Certification:
Each unit comes fully certified with a test certificate or an EC Declaration of Conformity stating compliance with the essential health and safety requirements of the Machinery Directive 2006/42/EC. This document clearly states the proof test at 1.5 times the rated capacity and the light load test of 2% of the rated capacity, which exceeds the requirements of the current applicable standard.

Environmental Testing and Multi-Immersion:
Tiger Lifting commissioned ORE Catapult (a leading, independent, cross-disciplined research and development organisation) to carry out a series of saltwater multi-immersion tests on Tiger Lifting’s subsea lifting hoists. These tests evaluated how several Tiger SS11 subsea lever hoists stood up to a pre-determined multi-immersion trial (defined in test scope document 2015/11646), specifically designed to replicate real life subsea lifting scenarios. The successful results of this programme of tests are documented and now form part of the product technical files.

Following on from the learnings of the successful test regime above and with the subsequent years’ empirical evidence of SS11 hoists used in the field, the SS19 model lever hoists were produced with several upgrades to the corrosion protection and internal components to further improve and enhance the performance of the Subsea hoist, including a new paint coating to ISO 12944 C5M and some key internal upgrades. These hoists have been suitably verified for a 54 day multi-immersion period.

The successful completion of this comprehensive series of tests and product development as detailed above, forms the collective evidence that allows Tiger to state that the UL26 range of hoists are fit for use in multi-immersion applications providing the timescales, pre-use testing, maintenance and service requirements as detailed in Tiger document Multi-Immersion Instruction Manual are strictly followed.



We used a subsea dock including a replica seabed



Saltwater was pumped in from the Blyth Estuary (North Sea)

We have also carried out intensive internal testing on components to ensure we achieved over 1500 hours protection to ASTM B117 conditions. This ensures the performance of the UL26 has been fully challenged in natural environments similar to the conditions it will be exposed to.



RFID:

Tiger UL26 clever hoists come with embedded Digital Supra RFID Chips. These are highly corrosion and impact resistant and when linked with the RiConnect system, digitalised product information relating to usability and traceability of a product is readily accessible. RiConnect is an asset management tool which is controlled through cloud-based software.

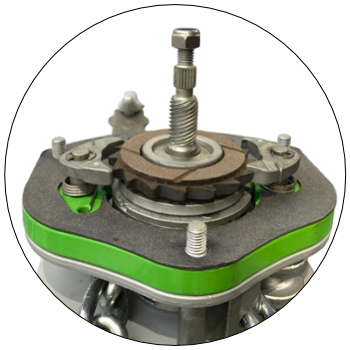

Brake Efficiency:

Tiger UL26 lever hoists utilise an 8 point multi-start thread pinion shaft which doubles the lead distance compared with typical 4 point threaded shafts, increasing the brake efficiency by 100 %. The rotational engagement of the brake works with the direction of the load sheave creating highly efficient braking ratios. With our fine manufacturing tolerances between the pinion shaft thread and critical brake components we have engineered out a known failure mode where contamination to the threads can lead to brake failure or slippage.

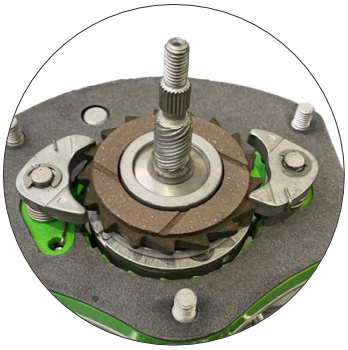

Patent Protected Quad Cam Brake Pawl System:
Our patented Quad Cam Pawl System guarantees permanent engagement of at least one of the two reciprocating cam pawls fitted to the UL26, ensuring the pawl only just clears the ratchet wheel, with the minimum of clearance as required under BS 4898:1973. But most importantly, in the unlikely event of a pawl spring failure, this design will ensure the brake is still fully functional and the load is sustained without damage to the mechanism.



Safety Brake:
Our unique rotational inertia driven torsion switch brake and freewheeling system automatically engages when the lever hoist feels the slightest resistance or load meaning there is no requirement for preload tension to activate the ratchet mechanism. This key feature means that the UL26 will raise, hold and lower the lightest of loads without slipping. The two stage process protects against accidental light load failures by putting the hoist into neutral whilst under load. (To achieve complete neutral the switch gear must be aligned which is impossible to do whilst under load.) This highly efficient method of operating is not only safer but easier for the operator whilst measurably increasing the brake take up efficiency rate.

Light Load Protection:
The unique brake system designed for the UL26 guarantees a light load protection at 2 % of the rated capacity.



Brake Chamber Protection:
Precisely engineered side plates and components protected by a full gasket give the UL26 brake chamber and contents maximum protection from external contamination.



Bonded Marine Friction Discs
The bonded marine friction discs are free of asbestos and have been developed and designed for subsea use creating a highly efficient, reliable braking surface for use in the most extreme conditions. These models are supplied with a grooved friction disc system which assist with dispersing salt water from between key surfaces therefore eliminating failure through aquaplaning (where a layer of water builds between brake surfaces leading to a loss of friction).



New Pinion Shaft Design:
The UL26 comes with a redesigned pinion shaft and disc hub which adds more strength and enables quicker and easier maintenance to be carried out by the trained service engineer. This enhancement opportunity has been considered because of the results of empirical evidence found from the excellent long-life performance of the previous SS11/SS19 ranges and through direct dialogue with our approved global service centres. This further demonstrates the strength of relationships between Tiger and our clients.

Multi Fall Load Sheave Bearings:
We have incorporated DU® self-lubricating metal polymer bearings into our multi chain fall load sheaves. Their success lies in the unique composite bearing structure comprised of a steel backing for mechanical strength and a porous sintered bronze interlayer impregnated with PTFE and lead for high wear resistance and extremely low friction properties. This makes them ideally suited to hoists used subsea. They provide improved energy efficiency due to low friction of PTFE-enriched overlay and have an extended service life with a strong wear-resistant bronze layer. There is zero maintenance as self-lubricating bearings can operate perfectly dry but have greater reliability with lubricant to avoid potential shaft/bearing seizure under boundary conditions.





Forgings:
Recessed hook yoke forgings offer full protection to the load chain anchor bolts on all our bottom hooks. Precise tolerances in the bottom hook yokes means foreign objects are restricted from entering the load sheave area.

Phosphor Bronze Bearings:
Ideally suited for subsea environments. The Tin content increases the corrosion resistance and strength of the alloy, the Phosphorus increases the wear resistance and stiffness of the alloy. Needle Bearings have been proven to be unstable and unsuitable for offshore and marine environments.



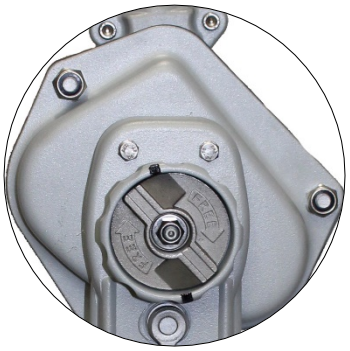

New Brake Cover Design:
UL26 models come with a redesigned brake cover which has removed the need for pawl shaft nuts to be fitted to the outside area.

One Piece Construction Pinion Gears:
UL26 gearboxes contain one-piece pinion gears. This revolutionary process in gear manufacturing uses drop-forged raw material, precision machined and heat treated with precise ratios between teeth and body.





Chain Guide:
The fluted chain stripper is specifically designed to guide the load chain safely onto or off the load sheave but it is the critical configuration of, and distance between, the chain stripper and the roller guide that ensures alignment of the chain so it cannot snag or jam. This allows the safe use of the UL26 when used in any orientation. The UL26 incorporates a newly designed roller guide which has further improved the relationship between chain and load sheave allowing for even smoother operations when UL26 units are used in extreme orientations.

Chain End Anchorage:
Tiger have incorporated the ultimate safeguarding of a single point failure mode as described in IMCA DO28 Rev. 2 Note 7.2 by installing a specially designed adjustable chain end stop. Tiger have specifically profiled and manufactured this item to fit the contours of the hoist. This offers complete assurance to the operator, whilst maintaining the flexibility of “freewheeling” the chain to any required starting position.



Hooks:
Our hooks incorporate our patented “EZ Check” feature which allows operators and inspection engineers to easily check to see if the hoist has been previously overloaded or shock loaded by simply measuring between the triangle of pop marks.



Our drop forged and heat-treated alloy hooks are furnished with heavy duty spring latch kits that fully engage into the recessed nose of the hook safeguarding the load when side loading of the latch occurs and offering maximum load security. The swivel hooks are attached to the yoke using high grade nuts & bolts allowing for complete inspection during any statutory inspection or written scheme maintenance.



The entire hook fitting has been protected using corrosion protected or stainless steel fixtures and fittings. Our latest latches incorporate a new wing design making them easier to operate in the operation area (e.g. wet gloved hands for offshore or subsea use).

Available with hooks that swivel under the full working load limit, to meet relevant standards i.e. AS 1418.2. Also available with spark resistant hooks.

Shipyard Hooks:
UL26 hoists are also available with shipyard hooks in 1.6t & 3.2t capacities. They are optional top or bottom hooks that are designed specifically for Tiger lever hoist applications where point loading of the hook is possible.



Protection and Finish:
UL26 hoists have a distinctive body and hooks to clearly define use in a marine environment.

Internal components are corrosion protected using our own unique formulation giving unprecedented long-term levels of corrosion protection. Stainless steel fittings are used throughout the hoist. These ensure the initial capital outlay of purchasing the UL26 is protected by allowing the statutory inspections and re-certifications to be easier and also help with the overall aesthetics of the hoist being maintained in an “as new” condition.

We have carried out intensive internal testing on components to ensure we achieved over 1500 hours protection to ASTM B117

UL26 hoists are completed with a two-stage finish combining electroplating as a base layer and then finished with a very hard-wearing sand texture powder coating paint which offers excellent corrosion protection and high impact protection.

The lessons learned from previous models have allowed us to once again raise the bar with the UL26 in giving longer life corrosion protection ideally suited for multi-immersion applications. Paint finish in accordance with ISO12944 C5M.

Optional Stainless Steel Flange Puller Kit c/w Podger:

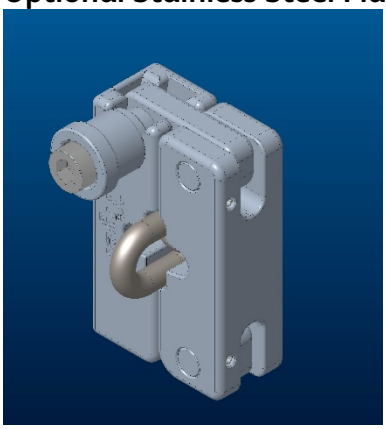
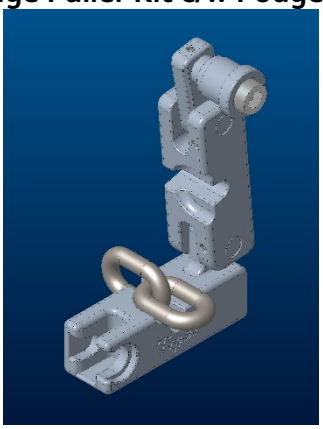
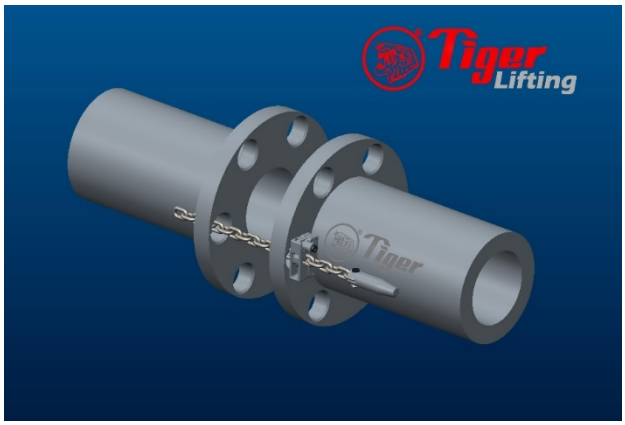

Product Code	Description	Puller Dimensions W x H x D (mm)
S-70-0710	Flange puller for 7.1mm and 6.3mm chain	110 x 70.2 x 65.5
S-70-1000	Flange puller for 10.0mm chain	110 x 70.2 x 65.5

Please contact us for more details.

Load Chains:
Tiger only use the highest quality alloy, calibrated load chains in Grade T or VH conforming to EN818-7 and ISO 16872. The UL26 comes as 3.0mtr HOL as standard but can be chained up to whatever length is required. Stainless steel load chain available on request for certain capacities.

Temperature Range:
Standard operating temperature range -40˚C to +80˚C - far exceeding the requirements of current standards. Ultra-low operating temperature units (-60˚C to +80˚C) also available.

High Performance Premium Grease:
We use new technology, wide temperature range, high performance premium grease. It contains no heavy metals or other harmful additives making it more environmentally friendly. This selection achieves the correct viscosity to prevent the grease migrating from the area of application. Even when mixed with 50 % high water absorption it has excellent adhesion and no sign of breakdown after 100,000 strokes and remains unchanged with no slump or breakdown unlike other “premium” greases. Load carrying ability, mechanical stability, corrosion protection, water resistance and increased operating temperature ranges are all improved by the using only the very best lubricant.

Handle:
The UL26 handle which interfaces with the operator is ergonomically designed for efficiency and ease of use and reduces the likelihood of a gloved hand from slipping off the end of the handle. It also helps prevent the use of unauthorised extension/cheater bars that could facilitate an overload on a non-overload protected UL26. All Tiger lever hoist handles contain rubber which is free from phthalates.

Tiger lever hoist handles are ultra-strong, with strengthening side ribs. This special feature:

- Protects against impact damage
- Protects the label
- Increases its robustness and longevity
- Eliminates torsion



www.tigerlifting.com
Our innovation, your safety.

Adaptor Components:
Drop forged adaptor maintaining maximum strength. 360° rotation and 180° pivot for maximum flexibility. Tested and certified to 4:1 factor of safety.



Self-locking (safety) hook, clevis shackle, reevable egg (master) link or sling hook fittings available (for units up to 10t capacity).

Performance:
The UL26 lever hoist has undergone a full test program that includes:
Type Testing

- Ultimate strength test, at least 4 times the Working load limit (WLL)
- Chain end anchorage test, passing at least 4 times the WLL without any restriction of the brake or gears

Test on every hoist

- Proof loading at 1.5 times the rated capacity
- Light load testing at maximum of 2% rated capacity

Technical Data

Product Code	Capacity (tonne)	Effort (kg)	Dimensions (mm)							Load Chain		Standard HOL (m)	Mass @ std HOL (kg)	Mass for extra metre HOL (kg)
			A	B	C	D	E	F1	F2	Diameter (mm)	No. of falls			
UL-0080	0.8	23	128	240	295	172	113	28	45	ø6.3	1	3	10.19	0.9
UL-0160	1.6	26	154	360	320	187	117	34	51	ø7.1	1	3	13.85	1.1
UL-0320	3.2	38	182	360	400	211	123	36	56	ø10.0	1	3	24.7	2.2
UL-0630	6.3	40	242	370	570	209	122	49	70	ø10.0	2	3	37.2	4.3
UL-0800	8.0	38	379	370	580	209	122	51	78	ø10.0	3	3	54.7	6.5
UL-1000	10.0	47	379	370	630	209	122	54	87	ø10.0	3	3	57.7	6.5
UL-1500	15.0	44	566	370	840	209	122	59	81	ø10.0	5	3	130.7	10.8
UL-2000	20.0	49	470	370	1050	264	174	81	110	ø10.0	6	3	176.7	13.1

www.tigerlifting.com

Our innovation, your safety.

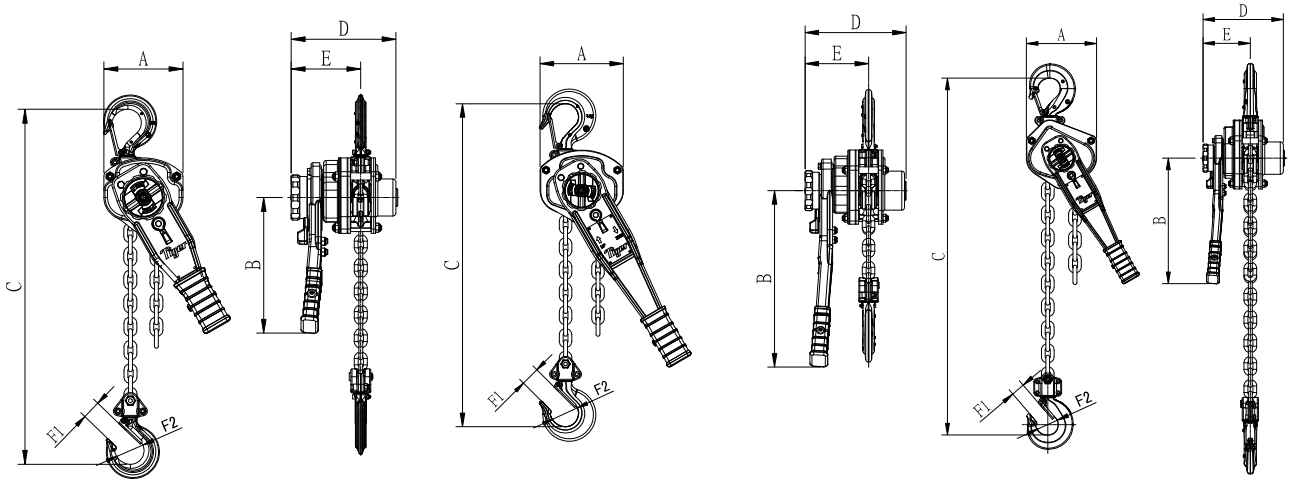

0.8t **1.6t** **3.2t**

Hook Technical Data

Capacity (Tonnes)	Collar measurements (mm)		Hook thickness at point shown in diagram (mm)		Hook throat Opening (mm)	"EZ Check" measurement (mm)
	a	b	c	d	e	f
0.8	8	13.5	23	17	34	52
1.6	10	15.5	26	21	39	59
3.2	12.5	20	37	32	42	76
6.3	19	30	43	36	58	86
8.0	20.7	33	50	43	60	110
10.0	20	33	52	48	70	121
15.0	-	36	67	60	67	130
20.0	-	48	77	72	90	162

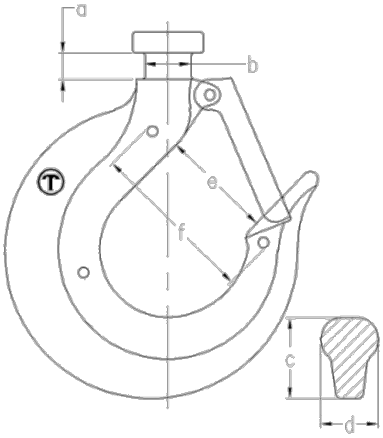

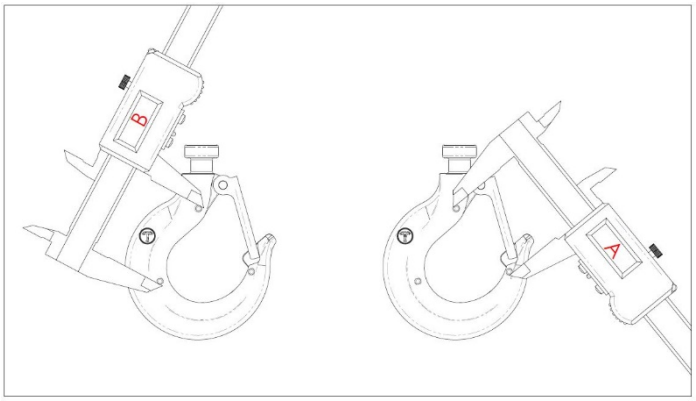

UL26 lever hoists are fitted with the patent pending Tiger "EZ check" 3 point marking system. With this system a quick check that the A and B measurements are the same (as shown in the diagram below) will indicate if the hooks have stretched If A≦B the hook is fine; If A>B the hook needs to be replaced.

Due to our policy of continual product development, dimensions, weights and specifications may change without prior notice. Please check with your Tiger sales team when ordering.

Bespoke designs available on request – contact info@tigerlifting.com for more information.